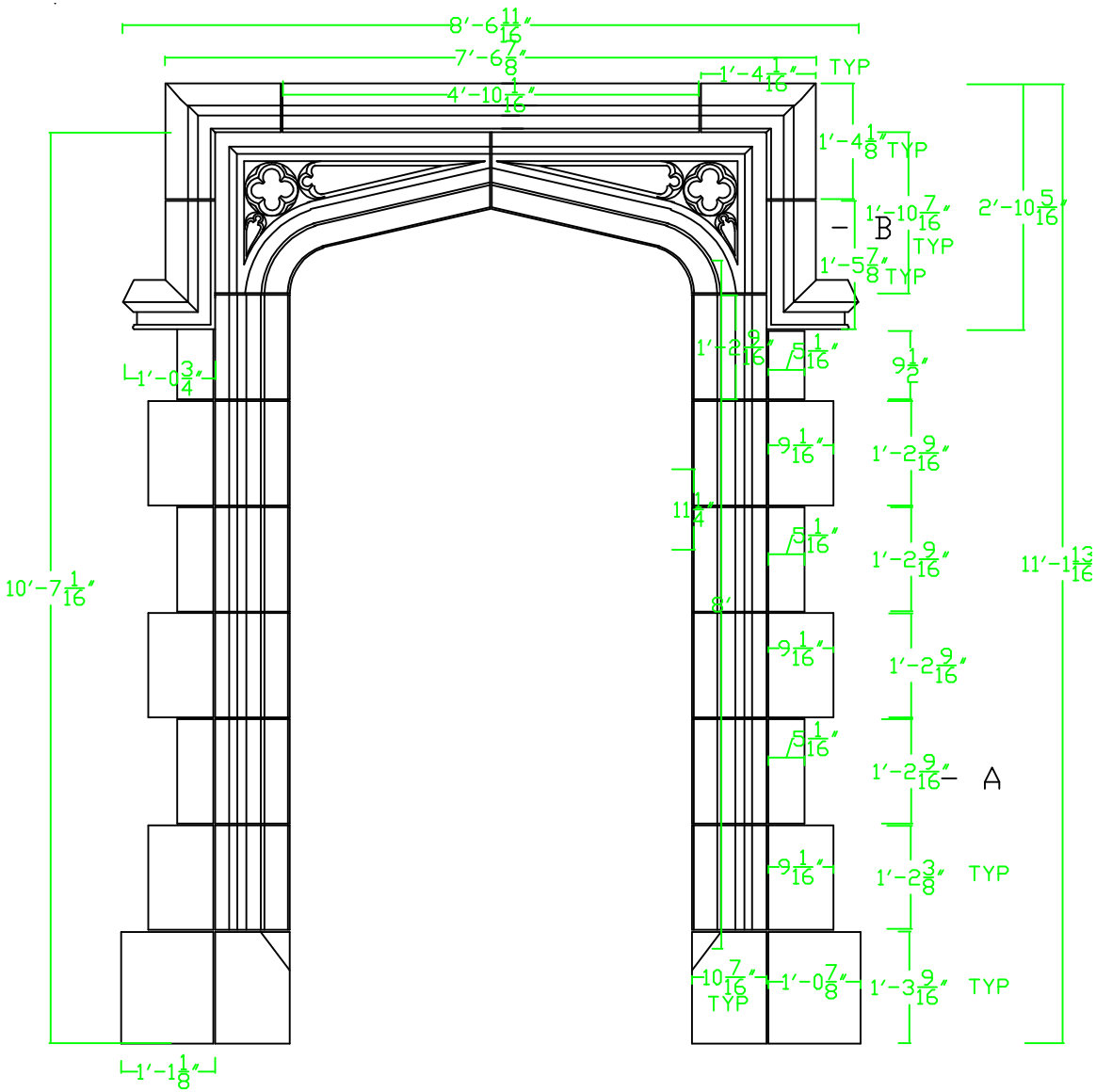
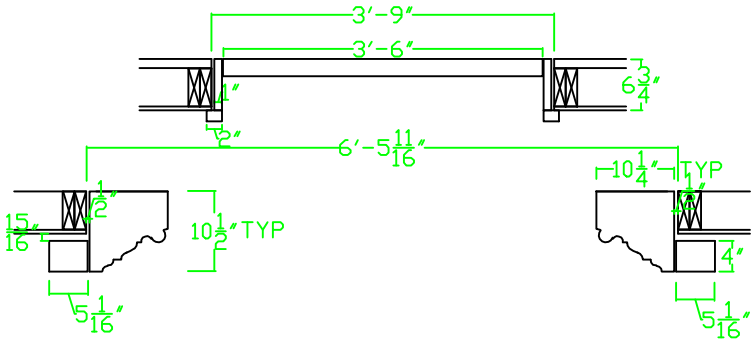
Cross-section at A