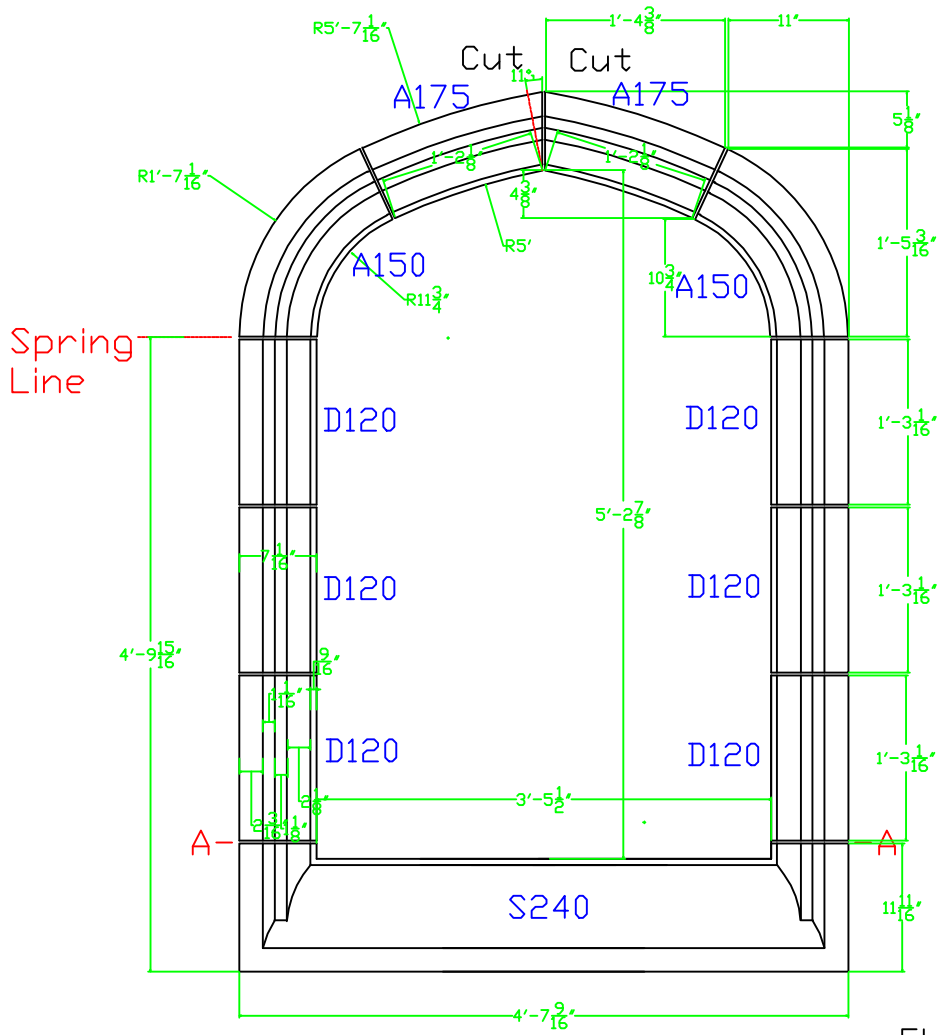

Flattened
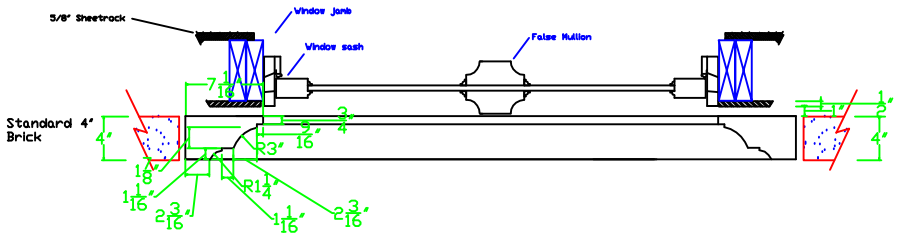
Cross-section at A