Porch Right Side View

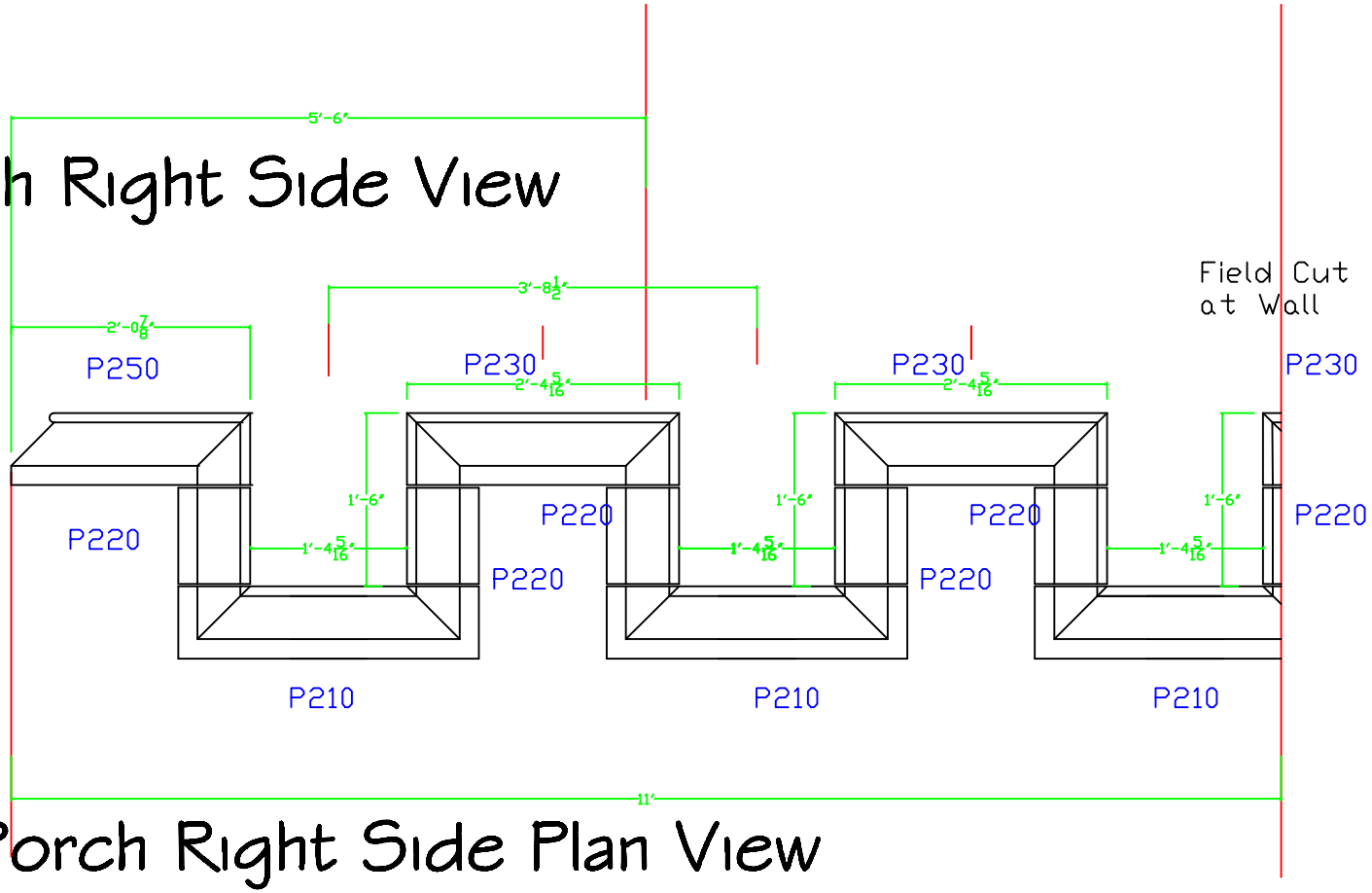
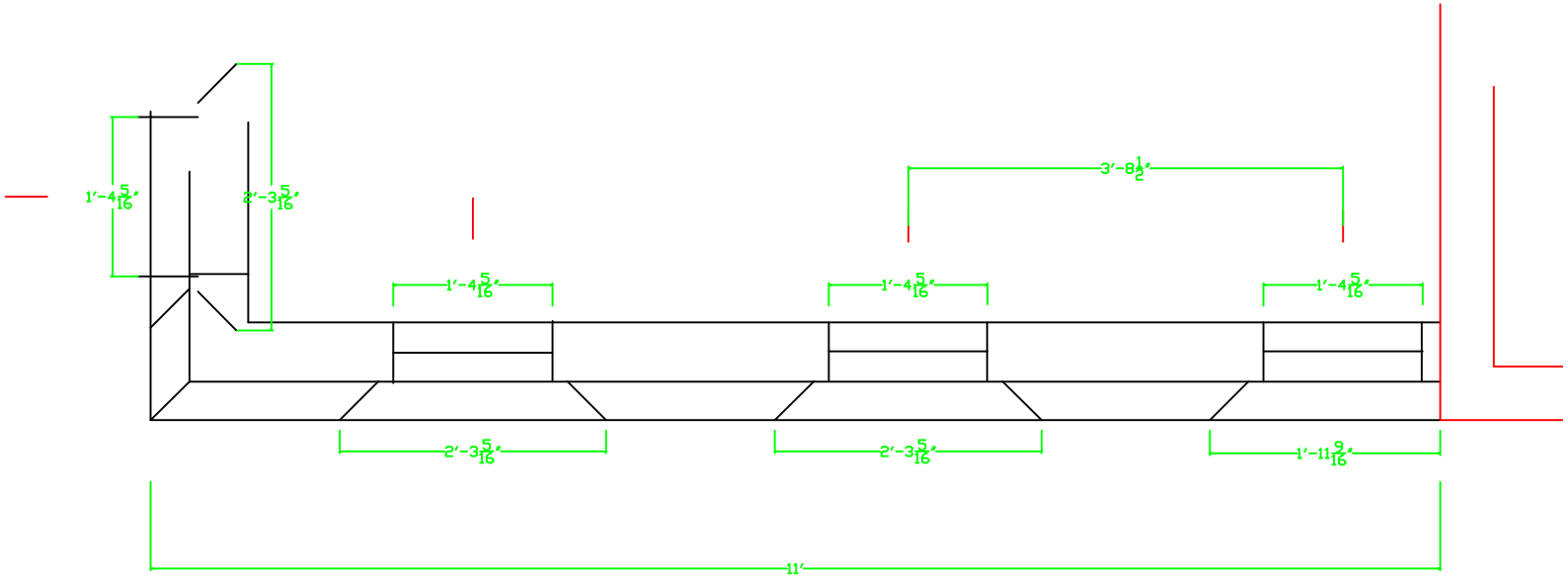
Porch Right Side Plan View